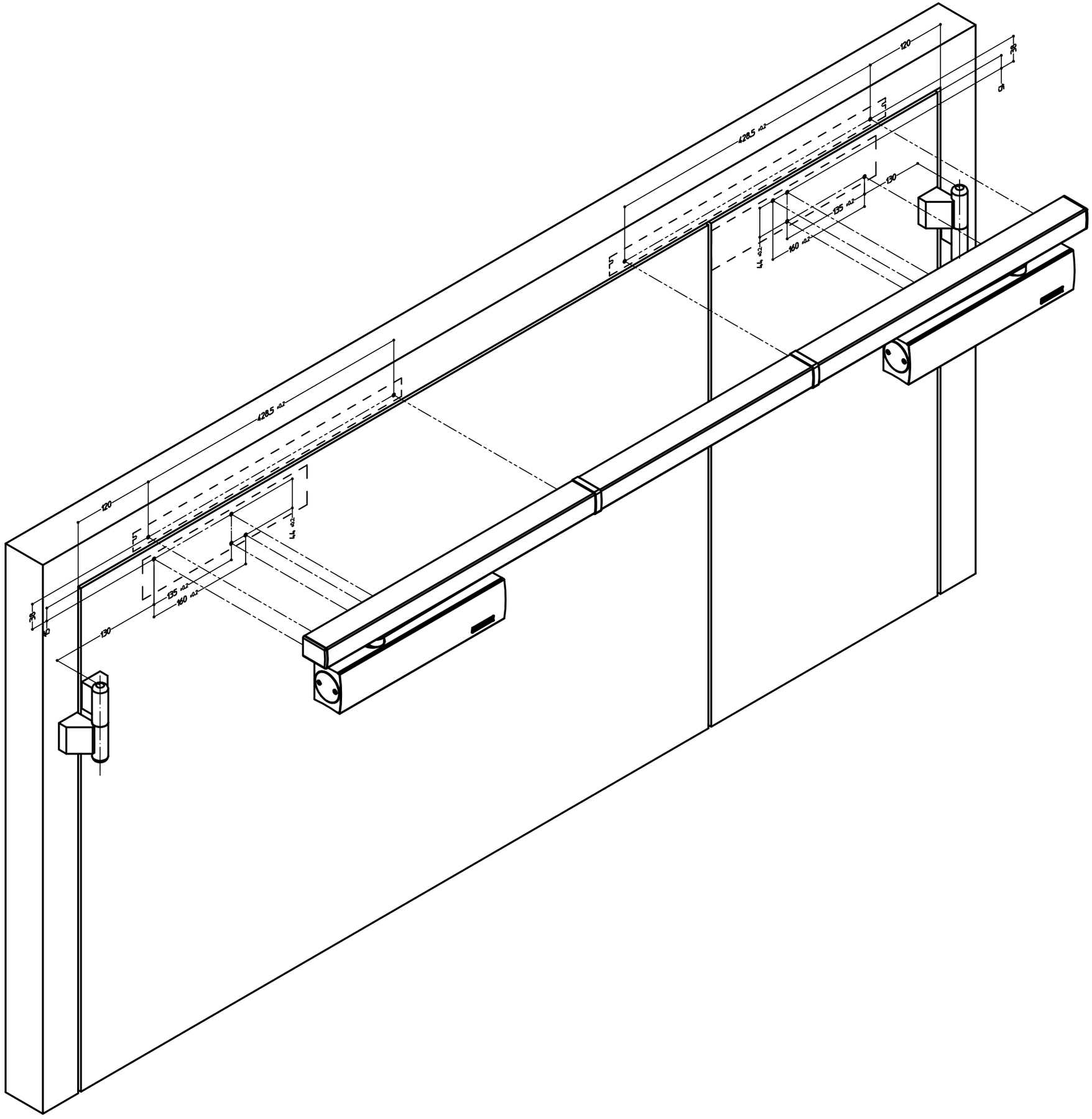
120
428.5 ±0.2
130
135 ±0.2
160 ±0.2
44 ±0.2
39
40
50
10
120
428.5 ±0.2
44 ±0.2
135 ±0.2
160 ±0.2
39
40
130