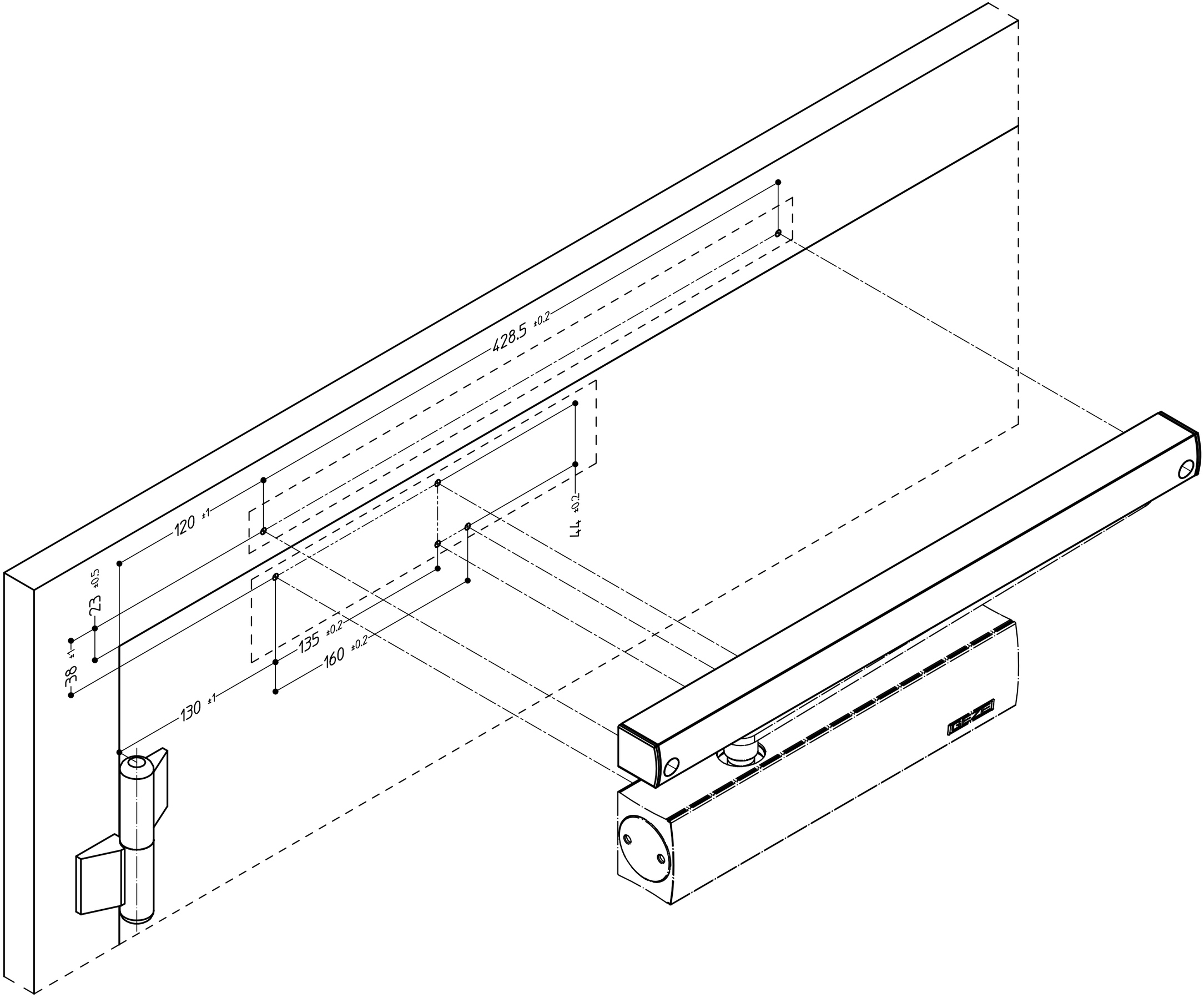
428.5 ±0.2
120 ±1
23 ±0.5
38 ±1
130 ±1
135 ±0.2
160 ±0.2
44 ±0.2